NOTES:

1. NUMBER OF HOPPERS TO BE CONFIRMED DURING DETAILED DESIGN.
2. SIZE AND QUANTITY OF ADDITIONAL EQUIPMENT REQUIRED TO BE DETERMINED DURING DETAILED DESIGN.

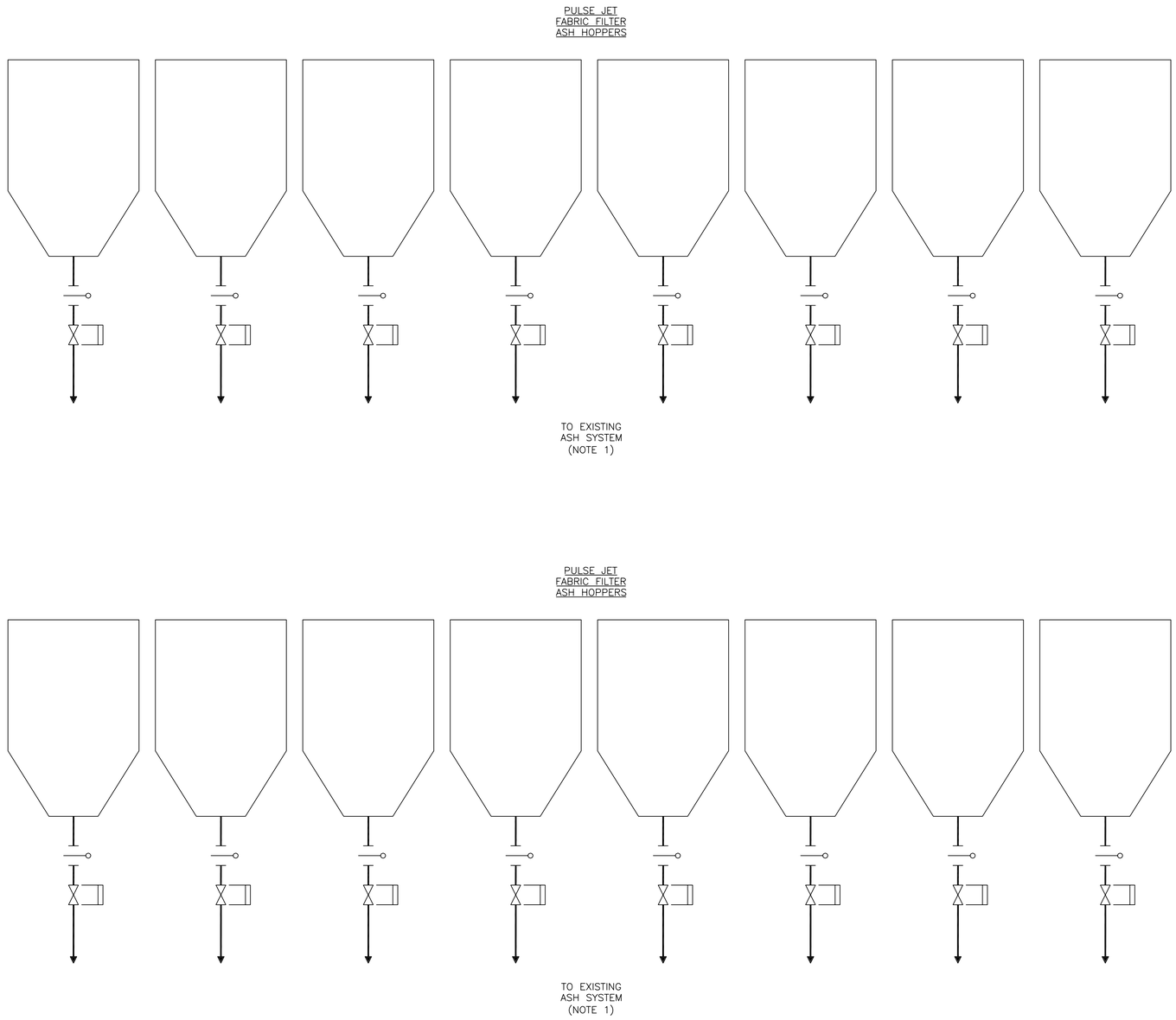

NOT TO BE USED FOR CONSTRUCTION

THE DISTRIBUTION AND USE OF THE NATIVE FORMAT CAD FILE OF THIS DRAWING IS UNCONTROLLED. THE USER SHALL VERIFY TRACEABILITY OF THIS DRAWING TO THE LATEST CONTROLLED VERSION.

NO	DATE	REVISIONS AND RECORD OF ISSUE	DRN	DES	CHK	PDE	APP
B	21/FEB/11	ISSUED FOR CLIENT REVIEW	PRP	SAT		MRW	
A	04/FEB/11	ISSUED FOR IN HOUSE REVIEW	HWB	NCM		MRW	

BLACK & VEATCH CORPORATION

DRAWN HWB

CHECKED DATE

LG&E/KU – GHENT STATION
PHASE II: AIR QUALITY CONTROL STUDY

UNIT 1 PROCESS FLOW DIAGRAM
FLY ASH HANDLING

PROJECT DRAWING NUMBER: 168908–G1ASB–M2022

REV: B

CODE

AREA

PRI03292 A1ASL015 02/21/11 D1 14:40:03 ACAD 16.1s (LMS Tech) 1=1

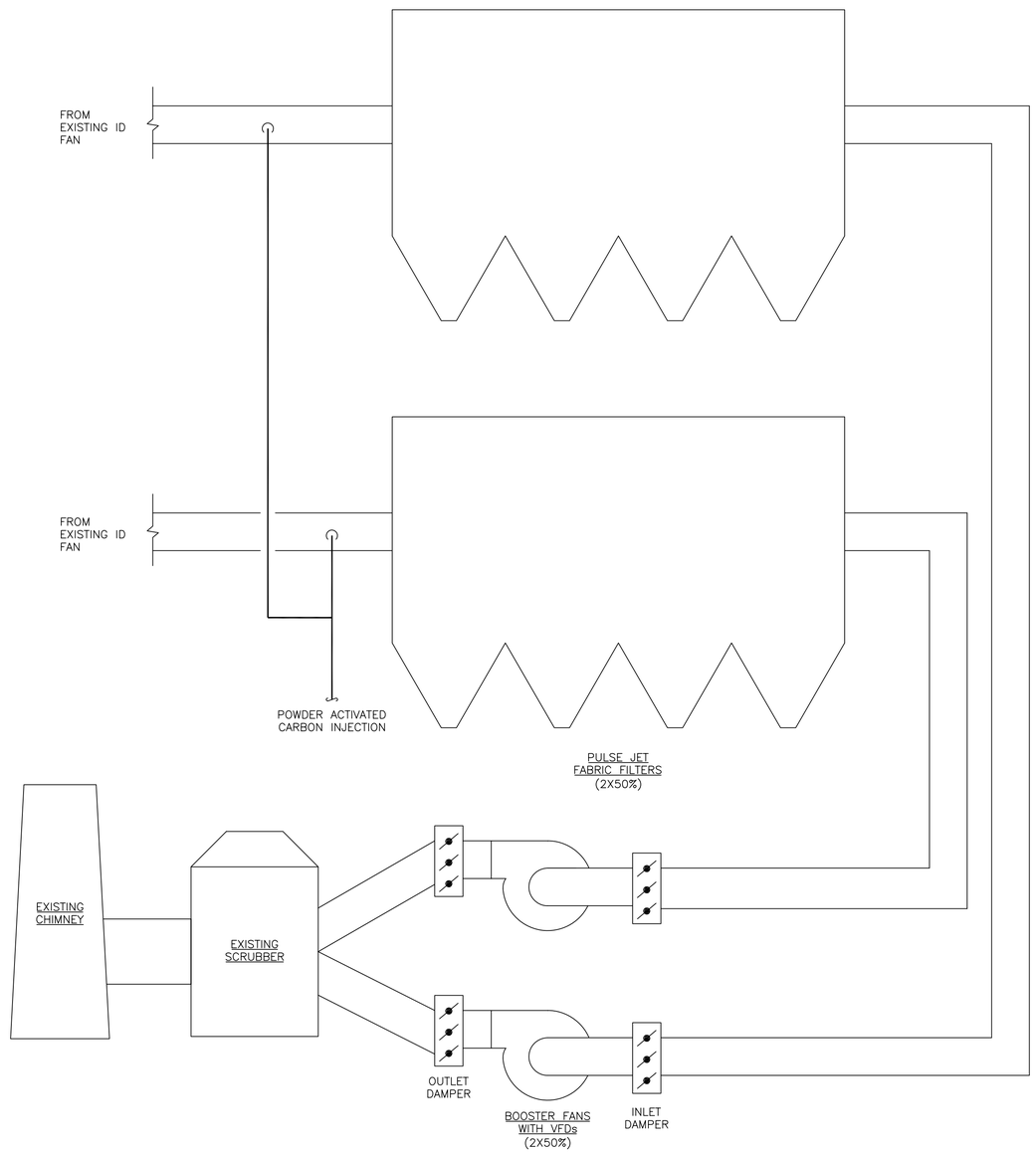

NOT TO BE USED
FOR CONSTRUCTION

THE DISTRIBUTION AND USE OF THE NATIVE FORMAT CAD FILE OF THIS DRAWING IS UNCONTROLLED. THE USER SHALL VERIFY TRACEABILITY OF THIS DRAWING TO THE LATEST CONTROLLED VERSION.

NO	DATE	REVISIONS AND RECORD OF ISSUE	DRN	DES	CHK	PDE	APP
B	21/FEB/11	ISSUED FOR CLIENT REVIEW	PRP	SAT		MRW	
A	04/FEB/11	ISSUED FOR IN HOUSE REVIEW	HWB	NCM		MRW	

BLACK & VEATCH CORPORATION

DRAWN HWB

CHECKED DATE

LG&E/KU – GHENT STATION
PHASE II: AIR QUALITY CONTROL STUDY

UNIT 1 PROCESS FLOW DIAGRAM
INDUCED DRAFT

PROJECT DRAWING NUMBER: 168908–G1CCE–M2145

REV: B

CODE

AREA

ACAD 16.1s (LMS Tech)
D1 1=1
14:40:22
PRI03392
A1ASL015
02/21/11

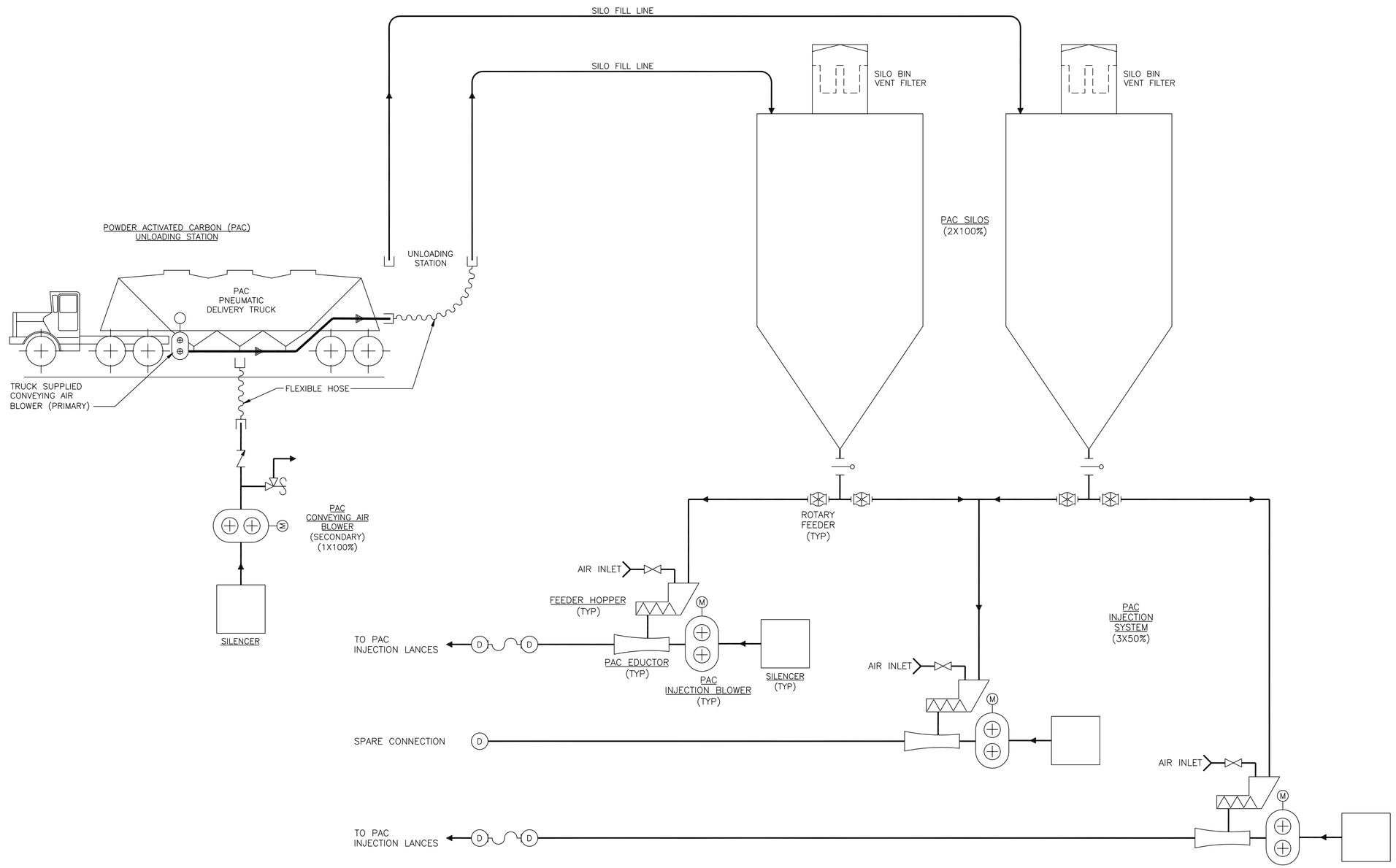

NOT TO BE USED FOR CONSTRUCTION

THE DISTRIBUTION AND USE OF THE NATIVE FORMAT CAD FILE OF THIS DRAWING IS UNCONTROLLED. THE USER SHALL VERIFY TRACEABILITY OF THIS DRAWING TO THE LATEST CONTROLLED VERSION.

NO	DATE	REVISIONS AND RECORD OF ISSUE	DRN	DES	CHK	PDE	APP
B	21/FEB/11	ISSUED FOR CLIENT REVIEW	PRP	SAT		MRW	
A	04/FEB/11	ISSUED FOR IN HOUSE REVIEW	HWB	NCM		MRW	

BLACK & VEATCH CORPORATION

DRAWN HWB

CHECKED DATE

LG&E/KU – GHENT STATION
PHASE II: AIR QUALITY CONTROL STUDY

UNIT 1 PROCESS FLOW DIAGRAM
POWDER ACTIVATED CARBON INJECTION

PROJECT DRAWING NUMBER 168908–G1CCH–M2148A REV B

CODE

AREA

PRI03292 A1ASL015 02/21/11 D1 14:40:39 ACAD 16.1s (LMS Tech) 1=1

NOTES:

1. EACH COMPARTMENT WILL HAVE MORE THAN ONE PULSE HEADER AND MULTIPLE PULSE VALVES AND PULSE PIPES. ONE SET IS SHOWN FOR CLARITY.
2. NUMBER OF COMPARTMENTS TO BE CONFIRMED DURING DETAILED DESIGN.

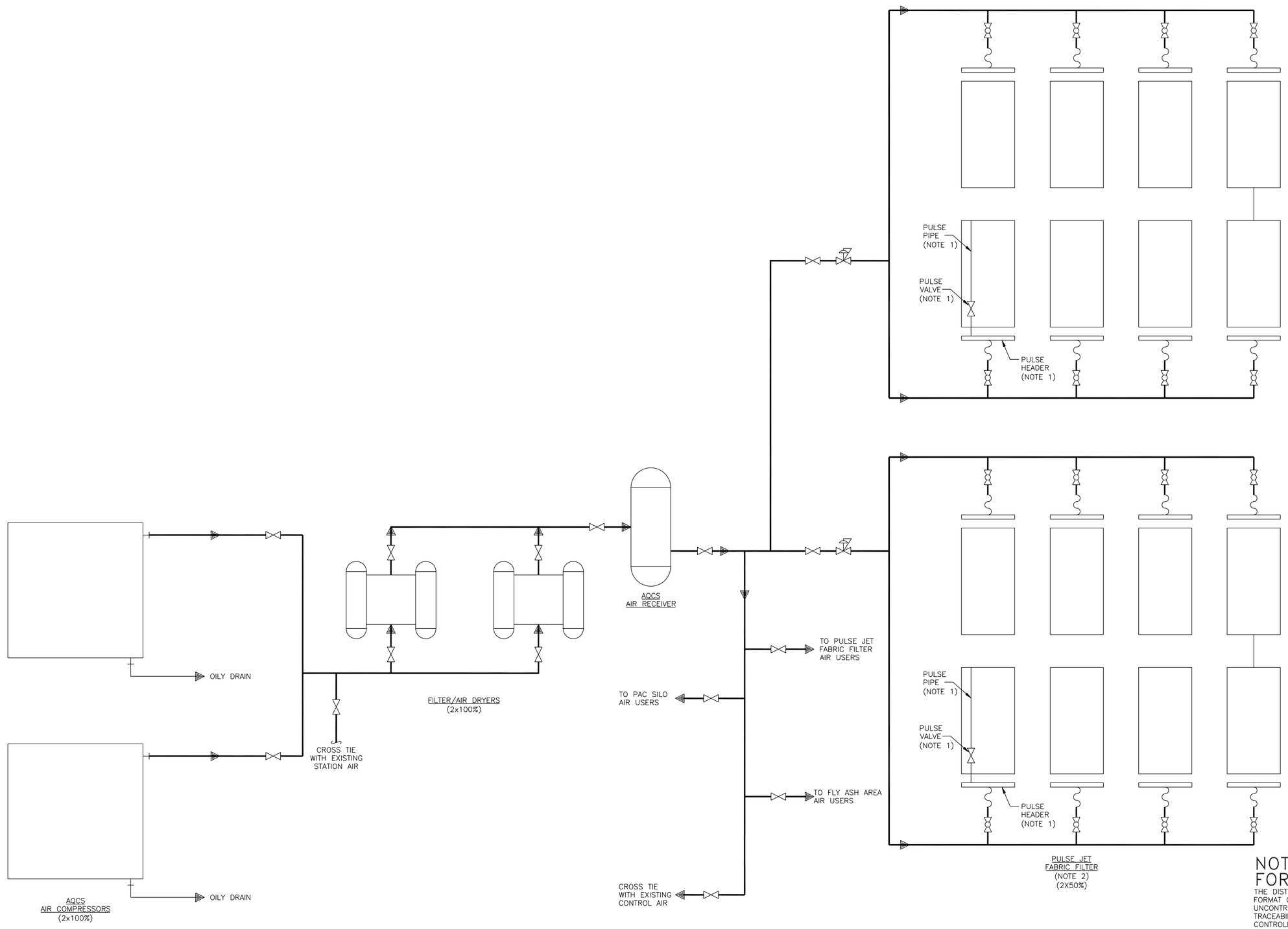

NOT TO BE USED FOR CONSTRUCTION

THE DISTRIBUTION AND USE OF THE NATIVE FORMAT CAD FILE OF THIS DRAWING IS UNCONTROLLED. THE USER SHALL VERIFY TRACEABILITY OF THIS DRAWING TO THE LATEST CONTROLLED VERSION.

NO	DATE	REVISIONS AND RECORD OF ISSUE	DRN	DES	CHK	PDE	APP
B	21/FEB/11	ISSUED FOR CLIENT REVIEW	PRP	SAT		MRW	
A	04/FEB/11	ISSUED FOR IN HOUSE REVIEW	HWB	NCM		MRW	

BLACK & VEATCH CORPORATION

DRAWN HWB
CHECKED
DATE

LG&E/KU – GHENT STATION
PHASE II: AIR QUALITY CONTROL STUDY

UNIT 1 PROCESS FLOW DIAGRAM
AQCS COMPRESSED AIR

PROJECT
DRAWING NUMBER 168908–G1CAB–M2182
REV B
CODE
AREA

PRO3292 A1ASL015 04/04/11 D1 1=1 11:21:27 ACAD 16.1s (LMS Tech)