NOTES:

1. ALL EQUIPMENT RATINGS/QUANTITIES ARE PRELIMINARY AND SHALL BE DETERMINED DURING DETAILED DESIGN.
2. THE NUMBER, SIZE AND NAMES OF INDIVIDUAL LOADS CONNECTED TO SWITCHGEAR AND MOTOR CONTROL CENTERS (MCCs) INCLUDING REQUIREMENTS FOR SPARES WILL BE DETERMINED DURING DETAILED DESIGN.
3. ALL CONDUCTORS ARE CABLE UNLESS NOTED OTHERWISE.
4. AN ETAP SHORT CIRCUIT AND LOAD FLOW STUDY WILL BE REQUIRED DURING DETAILED DESIGN.

LEGEND:

(1) LOCATED IN AQCS ELECTRICAL BUILDING

(2) LOCATED IN PDC IN PROXIMITY TO THE ID FANS.

REMOVABLE LINK

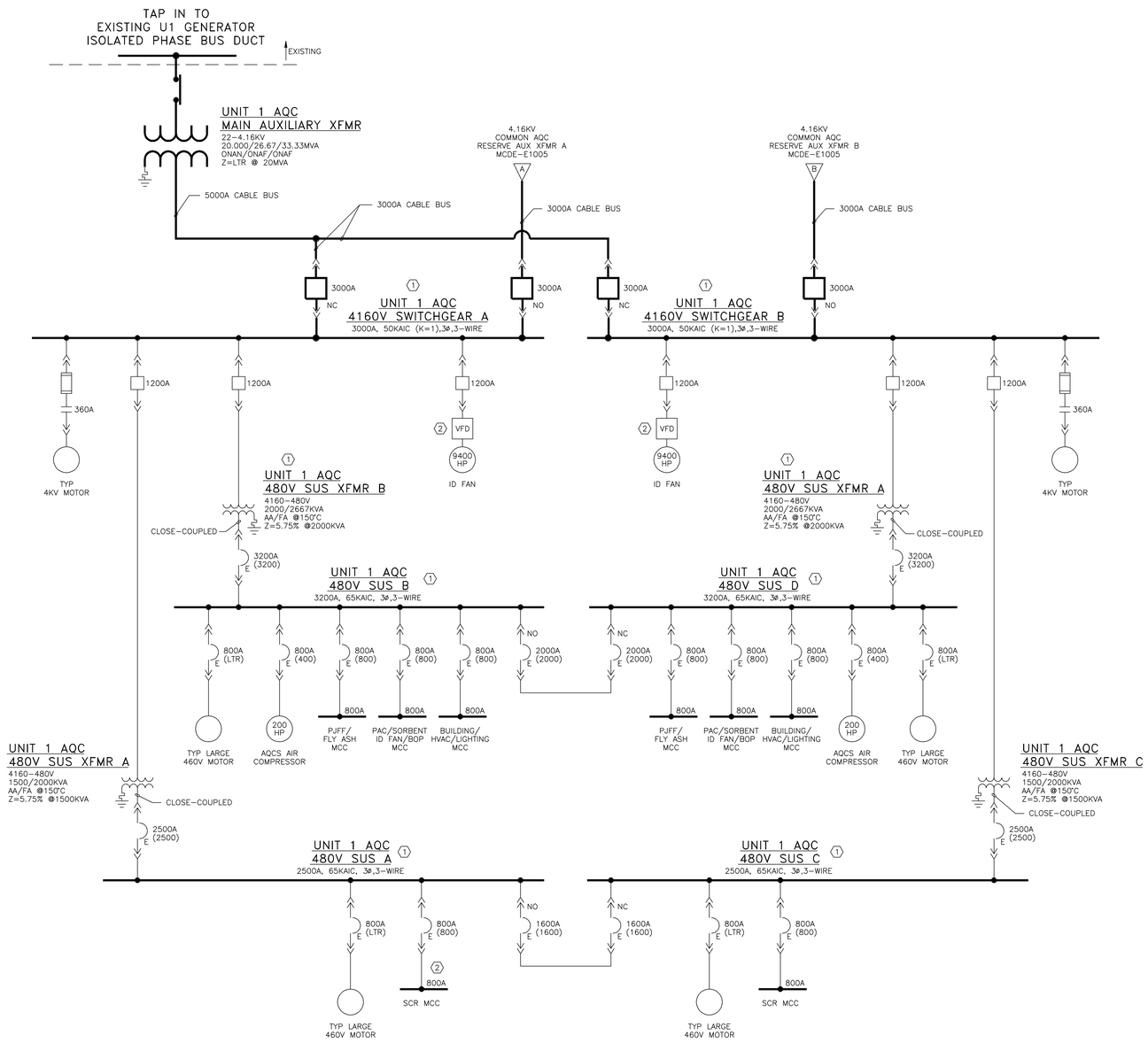

NOT TO BE USED
FOR CONSTRUCTION

THE DISTRIBUTION AND USE OF THE NATIVE FORMAT CAD FILE OF THIS DRAWING IS UNCONTROLLED. THE USER SHALL VERIFY TRACEABILITY OF THIS DRAWING TO THE LATEST CONTROLLED VERSION.

NO	DATE	REVISIONS AND RECORD OF ISSUE	DRN	DES	CHK	PDE	APP
B	03/01/2011	ISSUED FOR CLIENT REVIEW	JEB	JDC			
A	01/13/2011	ISSUED FOR IN–HOUSE REVIEW	JEB	JWB			

BLACK & VEATCH CORPORATION

ENGINEER JWB | DRAWN JEB | CHECKED | DATE

LG&E/KU – MILL CREEK STATION
PHASE II: AIR QUALITY CONTROL STUDY

ONE–LINE DIAGRAM
CONCEPTUAL OVERALL – UNIT 1 AQCS

PROJECT DRAWING NUMBER: 168908–M1DE–E1001 | REV: B

CODE | AREA

BLA31605 E1 ACAD 16.1s (LMS Tech)
A1ASL017 1 07:50:51
03/09/11

NOTES:

1. ALL EQUIPMENT RATINGS/QUANTITIES ARE PRELIMINARY AND SHALL BE DETERMINED DURING DETAILED DESIGN.
2. THE NUMBER, SIZE AND NAMES OF INDIVIDUAL LOADS CONNECTED TO SWITCHGEAR AND MOTOR CONTROL CENTERS (MCCs) INCLUDING REQUIREMENTS FOR SPARES WILL BE DETERMINED DURING DETAILED DESIGN.
3. ALL CONDUCTORS ARE CABLE UNLESS NOTED OTHERWISE.
4. AN ETAP SHORT CIRCUIT AND LOAD FLOW STUDY WILL BE REQUIRED DURING DETAIL DESIGN.

LEGEND:

1 LOCATED IN AQCS ELECTRICAL BUILDING

2 LOCATED IN PDC IN PROXIMITY TO THE ID FANS

REMOVABLE LINK

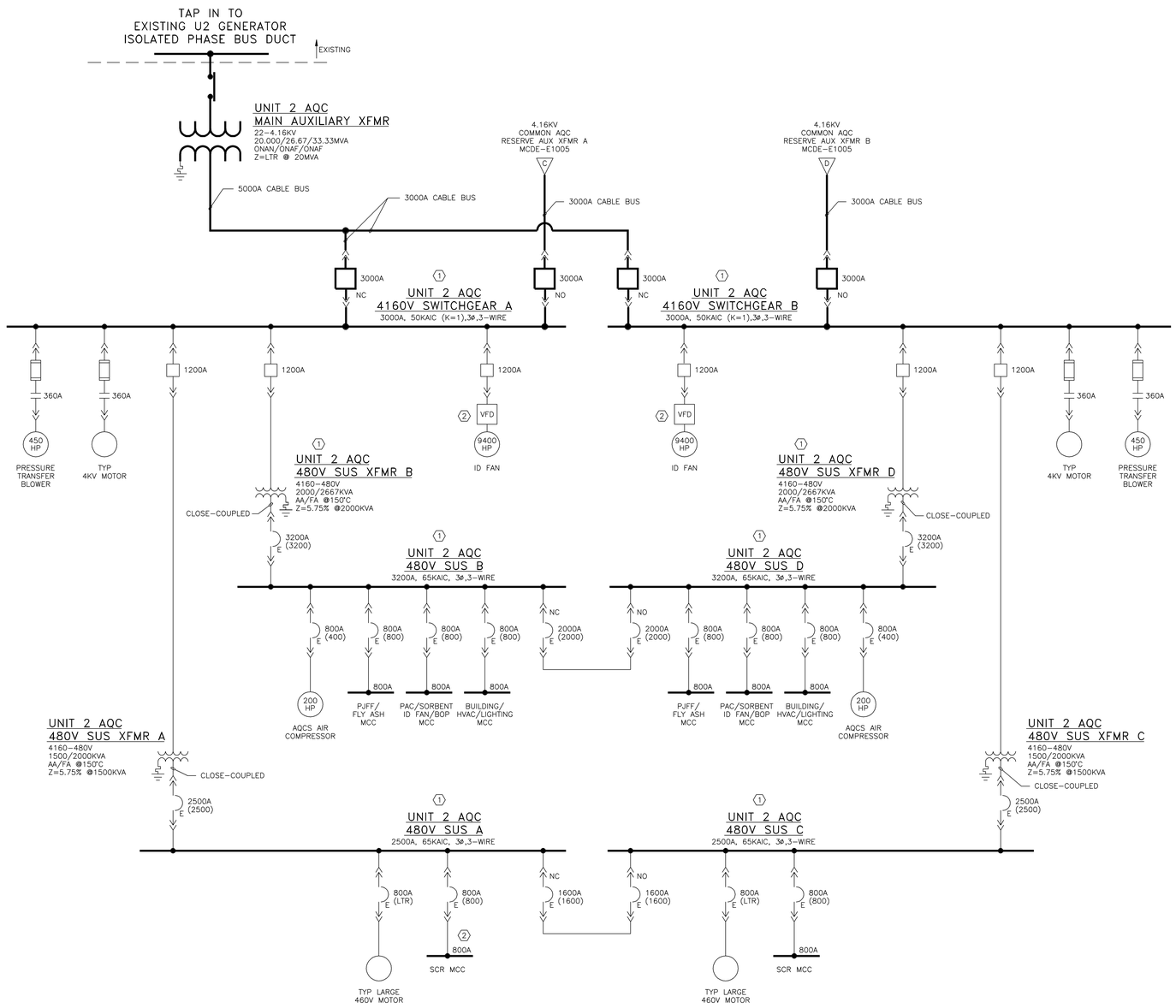

NOT TO BE USED FOR CONSTRUCTION

THE DISTRIBUTION AND USE OF THE NATIVE FORMAT CAD FILE OF THIS DRAWING IS UNCONTROLLED. THE USER SHALL VERIFY TRACEABILITY OF THIS DRAWING TO THE LATEST CONTROLLED VERSION.

NO	DATE	REVISIONS AND RECORD OF ISSUE	DRN	DES	CHK	PDE	APP
B	03/01/2011	ISSUED FOR CLIENT REVIEW	JEB	JCD			
A	01/13/2011	ISSUED FOR IN-HOUSE REVIEW	JEB	JWB			

BLACK & VEATCH CORPORATION

ENGINEER JWB | DRAWN JEB | CHECKED | DATE

LG&E/KU – MILL CREEK STATION
PHASE II: AIR QUALITY CONTROL STUDY

ONE-LINE DIAGRAM
CONCEPTUAL OVERALL – UNIT 2 AQCS

PROJECT | DRAWING NUMBER: 168908-M2DE-E1002 | REV: B

CODE | AREA

BLA31605 A1ASL017 E1 03/09/11 07:54:19 ACAD 16.1s (LMS Tech) 1

NOTES:

1. ALL EQUIPMENT RATINGS/QUANTITIES ARE PRELIMINARY AND SHALL BE DETERMINED DURING DETAILED DESIGN.
2. THE NUMBER, SIZE AND NAMES OF INDIVIDUAL LOADS CONNECTED TO SWITCHGEAR AND MOTOR CONTROL CENTERS (MCCs) INCLUDING REQUIREMENTS FOR SPARES WILL BE DETERMINED DURING DETAILED DESIGN.
3. ALL CONDUCTORS CABLE UNLESS NOTED OTHERWISE.
4. AN ETAP SHORT CIRCUIT AND LOAD FLOW STUDY WILL BE REQUIRED DURING DETAIL DESIGN.

LEGEND:

(1) LOCATED IN AQCS ELECTRICAL BUILDING.

(2) LOCATED IN PDC IN PROXIMITY TO ID FANS.

REMOVABLE LINK

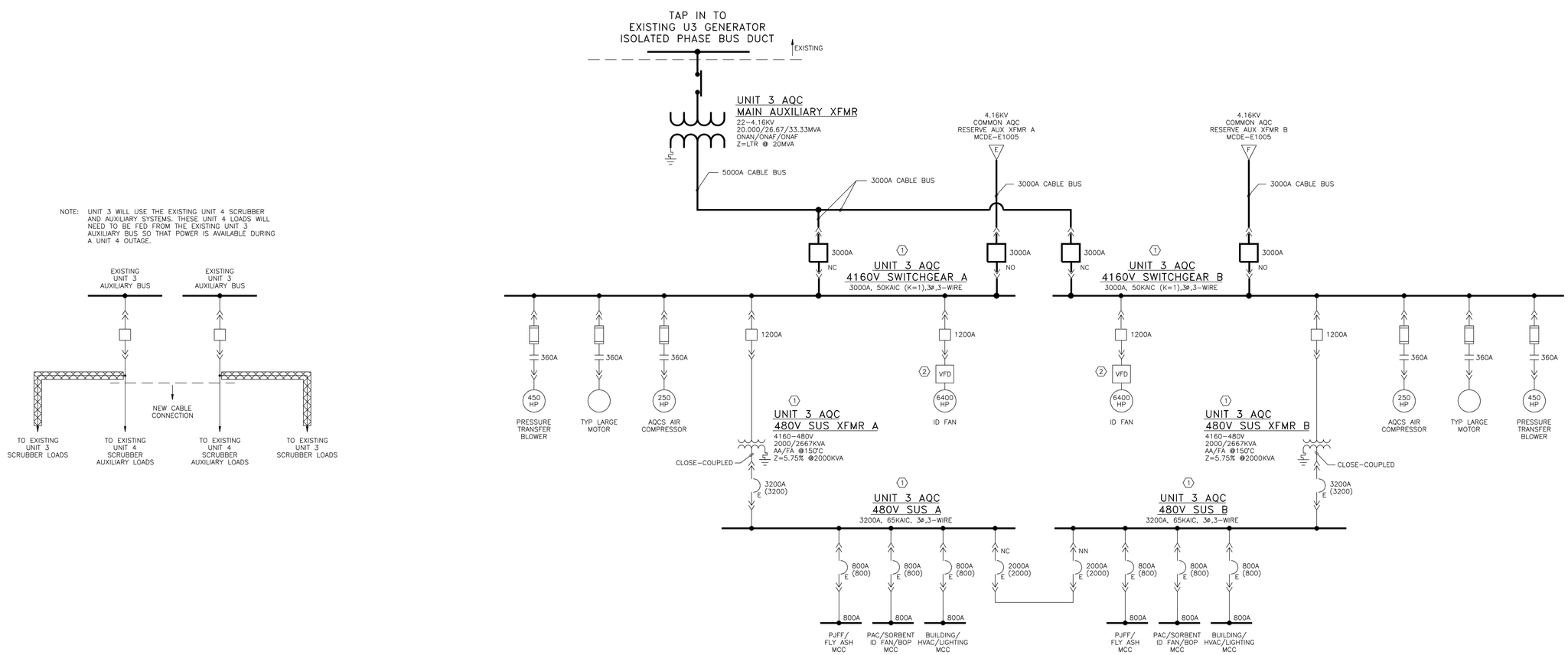

NOTE: UNIT 3 WILL USE THE EXISTING UNIT 4 SCRUBBER AND AUXILIARY SYSTEMS. THESE UNIT 4 LOADS WILL NEED TO BE FED FROM THE EXISTING UNIT 3 AUXILIARY BUS SO THAT POWER IS AVAILABLE DURING A UNIT 4 OUTAGE.

NOT TO BE USED FOR CONSTRUCTION

THE DISTRIBUTION AND USE OF THE NATIVE FORMAT CAD FILE OF THIS DRAWING IS UNCONTROLLED. THE USER SHALL VERIFY TRACEABILITY OF THIS DRAWING TO THE LATEST CONTROLLED VERSION.

NO	DATE	REVISIONS AND RECORD OF ISSUE	DRN	DES	CHK	PDE	APP
B	03/01/2011	ISSUED FOR CLIENT REVIEW	JEB	JDC			
A	01/13/2011	ISSUED FOR IN–HOUSE REVIEW	JEB	JWB			

BLACK & VEATCH CORPORATION

ENGINEER JWB DRAWN JEB

CHECKED DATE

LG&E/KU – MILL CREEK STATION
PHASE II: AIR QUALITY CONTROL STUDY

ONE–LINE DIAGRAM
CONCEPTUAL OVERALL – UNIT 3 AQCS

PROJECT DRAWING NUMBER: 168908–M3DE–E1003

REV: B

CODE

AREA

BLA31605 E1 1
A1ASL017 AC4D 16.1s (LMS Tech)
03/09/11 07:58:02

NOTES:

1. ALL EQUIPMENT RATINGS/QUANTITIES ARE PRELIMINARY AND SHALL BE DETERMINED DURING DETAILED DESIGN.
2. THE NUMBER, SIZE AND NAMES OF INDIVIDUAL LOADS CONNECTED TO SWITCHGEAR AND MOTOR CONTROL CENTERS (MCCs) INCLUDING REQUIREMENTS FOR SPARES WILL BE DETERMINED DURING DETAILED DESIGN.
3. ALL CONDUCTORS CABLE UNLESS NOTED OTHERWISE.
4. AN ETAP SHORT CIRCUIT AND LOAD FLOW STUDY WILL BE REQUIRED DURING DETAIL DESIGN.

LEGEND:

1. LOCATED IN FGD ELECTRICAL BUILDING
2. LOCATED AT AQCS ELECTRICAL BUILDING
3. LOCATED IN PDC IN PROXIMITY TO BOOSTER FANS

REMOVABLE LINK

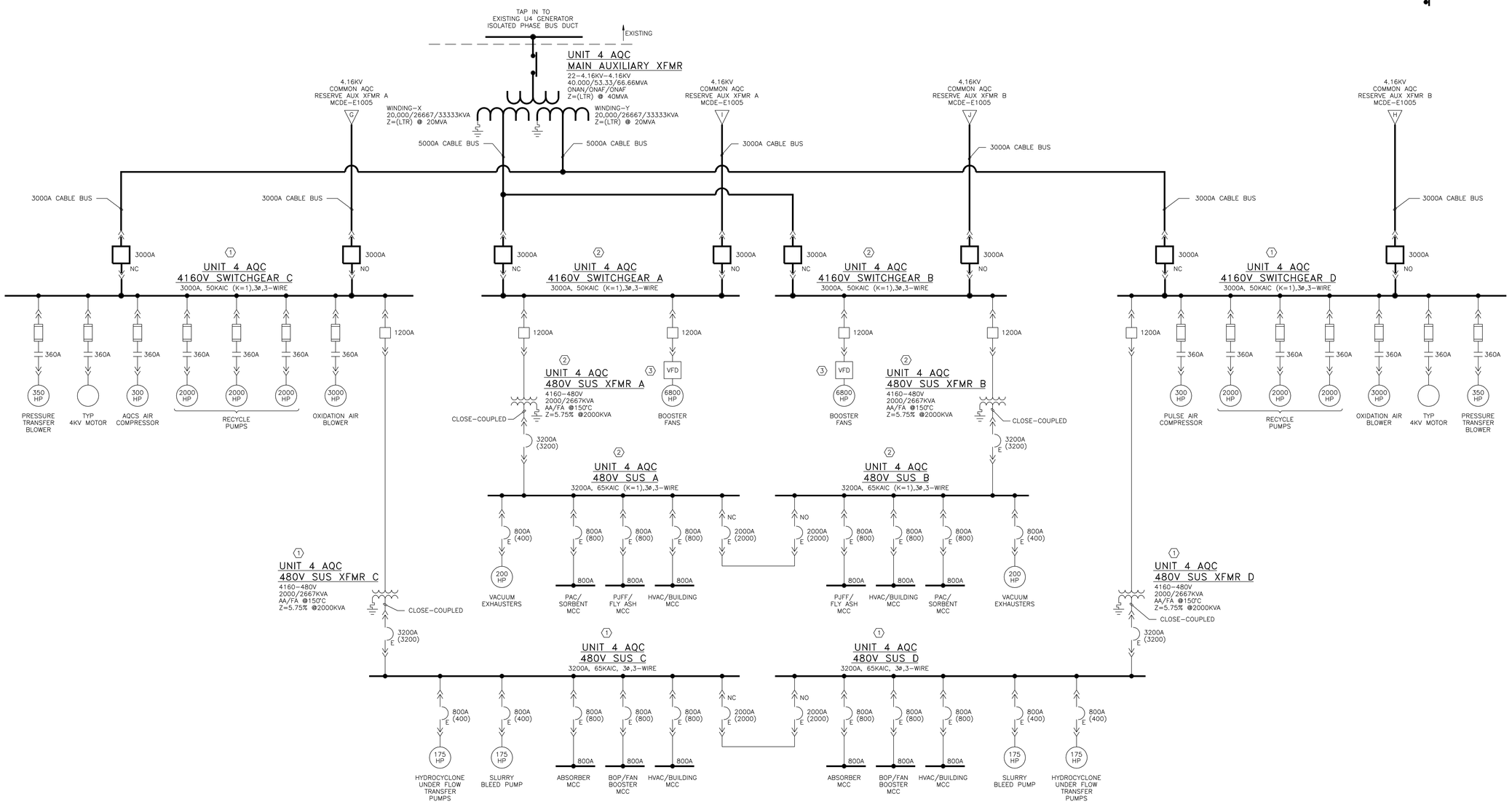

NOT TO BE USED FOR CONSTRUCTION

THE DISTRIBUTION AND USE OF THE NATIVE FORMAT CAD FILE OF THIS DRAWING IS UNCONTROLLED. THE USER SHALL VERIFY TRACEABILITY OF THIS DRAWING TO THE LATEST CONTROLLED VERSION.

NO	DATE	REVISIONS AND RECORD OF ISSUE	DRN	DES	CHK	PDE	APP
B	03/01/2011	ISSUED FOR CLIENT REVIEW	JEB	JDC			
A	01/13/2011	ISSUED FOR IN-HOUSE REVIEW	JEB	JWB			

BLACK & VEATCH CORPORATION

LG&E/KU – MILL CREEK STATION
PHASE II: AIR QUALITY CONTROL STUDY

ENGINEER JWB | DRAWN JEB | CHECKED | DATE

ONE-LINE DIAGRAM
CONCEPTUAL OVERALL – UNIT 4 AQCS

PROJECT | DRAWING NUMBER: 168908-M4DE-E1004 | REV: B

CODE | AREA

BLA31605 A1A3L017 E1 03/09/11 08:19:39 ACAD 16.1s (LMS Tech) 1

NOTES:

1. ALL EQUIPMENT RATINGS/QUANTITIES ARE PRELIMINARY AND SHALL BE DETERMINED DURING DETAILED DESIGN.
2. THE NUMBER, SIZE AND NAMES OF INDIVIDUAL LOADS CONNECTED TO SWITCHGEAR AND MOTOR CONTROL CENTERS (MCCs) INCLUDING REQUIREMENTS FOR SPARES WILL BE DETERMINED DURING DETAILED DESIGN.
3. ALL CONDUCTORS ARE CABLE UNLESS NOTED OTHERWISE.
4. AN ETAP SHORT CIRCUIT AND FLOW STUDY WILL BE REQUIRED DURING DETAILED DESIGN.
5. MODIFY AND ADD NEW 15KV RATED CIRCUIT TO EXISTING 13.8KV OUTDOOR SWITCHGEAR. EXTEND 13.8K BUS AT EACH END OF THE 13.8KV SWITCHGEAR.

LEGEND:

(1) LOCATED IN COMMON AQC RESERVE POWER DISTRIBUTION CENTER (PDC)

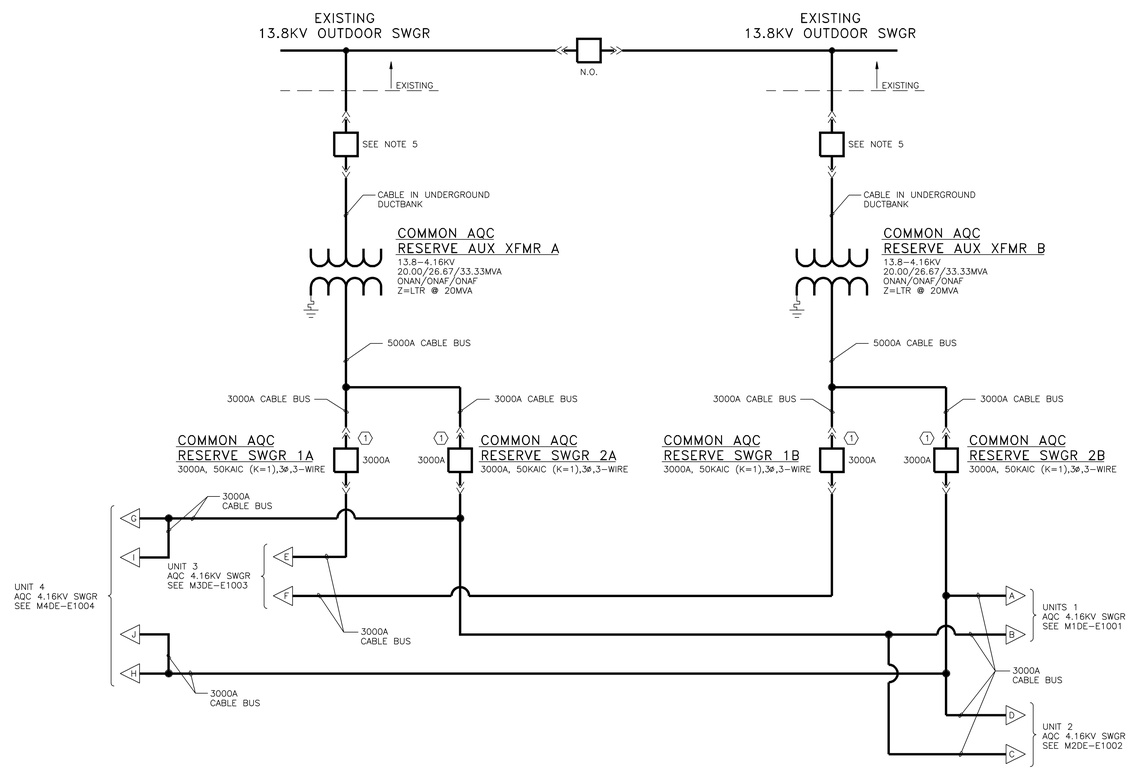

NOT TO BE USED FOR CONSTRUCTION

THE DISTRIBUTION AND USE OF THE NATIVE FORMAT CAD FILE OF THIS DRAWING IS UNCONTROLLED. THE USER SHALL VERIFY TRACEABILITY OF THIS DRAWING TO THE LATEST CONTROLLED VERSION.

NO	DATE	REVISIONS AND RECORD OF ISSUE	DRN	DES	CHK	PDE	APP
B	03/01/2011	ISSUED FOR CLIENT REVIEW	JEB	JDC			
A	01/13/2011	ISSUED FOR IN-HOUSE REVIEW	JEB	JWB			

BLACK & VEATCH CORPORATION

ENGINEER JWB | DRAWN JEB | CHECKED | DATE

LG&E/KU – MILL CREEK STATION
PHASE II: AIR QUALITY CONTROL STUDY

ONE-LINE DIAGRAM
CONCEPTUAL OVERALL – AQCS RESERVE

PROJECT | DRAWING NUMBER: 168908-MCDE-E1005 | REV: B

CODE | AREA

BLA31605 A1ASL017 02/22/11 E1 14:44:41 ACAD 16.1s (LMS Tech) 1